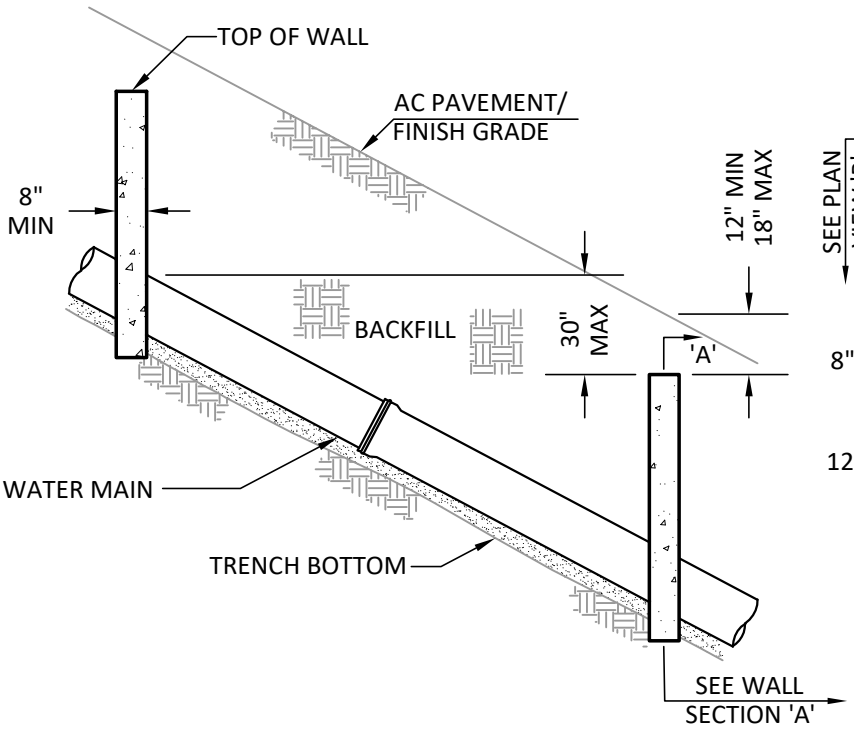

CUT-OFF WALL
FOR GRADES 20% TO 50%

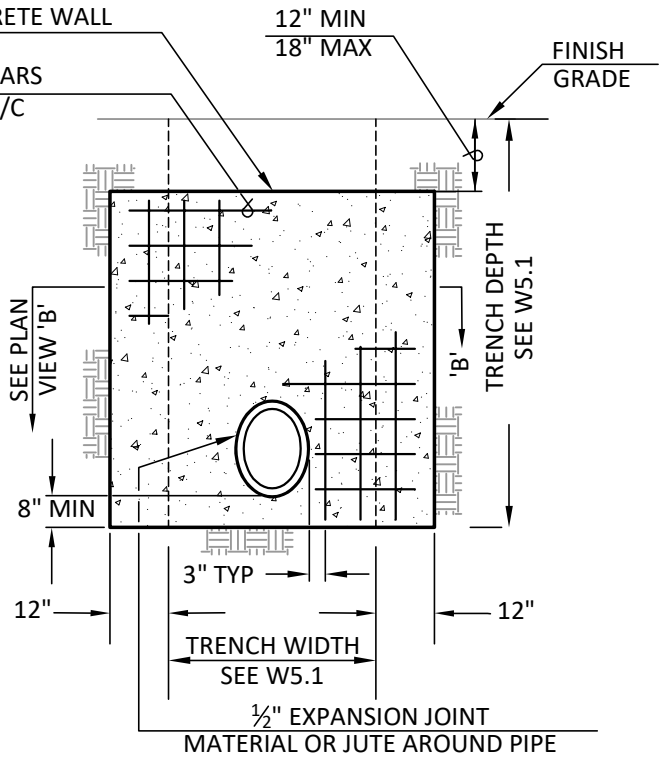

WALL SECTION 'A'
ELEVATION VIEW

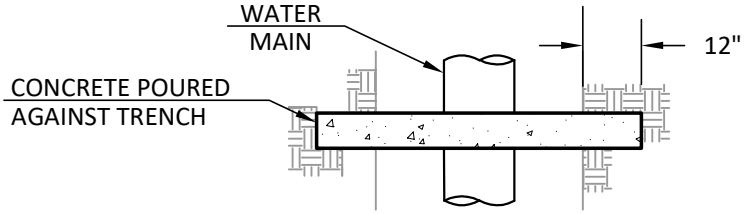

WALL SECTION 'B'
PLAN VIEW

NOTES:

1. REFER TO THE SBMWD DESIGN PLANS AND TECHNICAL SPECIFICATIONS WHERE APPLICABLE.
2. FOR USE AS TRENCH BACKFILL STABILIZATION.
3. THE DETAILS SHOWN REPRESENT THE MINIMUM REQUIREMENTS. CONTRACTOR SHALL PROVIDE A SUBMITTAL TO SBMWD FOR REVIEW AND APPROVAL PRIOR TO INSTALLATION.
4. WALLS SHALL BE REINFORCED CONCRETE OR 8" X 8" X 16" CONCRETE BLOCK, REINFORCED AND ALL CORES FILLED WITH GROUT PER THE SPECIFICATIONS.
5. SBMWD STANDARD DRAWING W6.15 SHALL BE CONSIDERED AND INSTALLED ON A CASE BY CASE BASIS AS DETERMINED BY SBMWD.
6. REFER TO SBMWD STANDARD DRAWING W5.1 FOR TRENCH WIDTH AND DEPTH REQUIREMENTS.

REVISION DATE: 3/29/2016

		SAN BERNARDINO MUNICIPAL WATER DEPARTMENT	DRAWING NUMBER
		CUT-OFF WALL FOR GRADES 20% TO 50%	SBMWD
F.D.L.	MAR. '16		W6.15
REVISION	DATE	APPROVED ____ WARREN HUANG, P.E. RCE 49208	DATE 07/04/2019
SCALE:	NONE		